OSG 1200 K
Mechanical Four-Arm Turnstile



Main Features

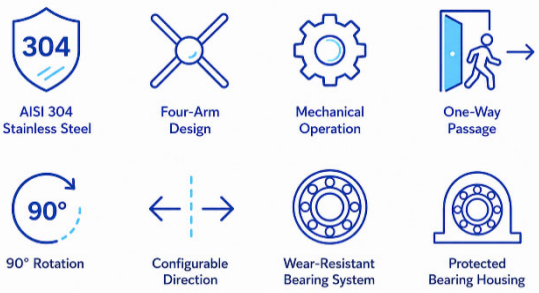

Key Advantages

- Simple and reliable one-way pedestrian guidance
- Four-arm mechanism with 90° passage rotation
- Configurable clockwise or counter-clockwise operation
- Durable AISI 304 stainless steel construction
- Wear-resistant mechanical bearing system
- Designed for clear entrance and exit flow organisation

Standard Features

Construction	AISI 304 stainless steel, four-arm mechanical design
Operation	Manual, one-way passage with 90° rotation per person
Operating Direction	Configurable clockwise or counter-clockwise
Bearing Assembly	Wear-resistant bearing system with concealed protected housing

Optional Features

Powder Coating	Electrostatic powder-coated finish upon request
Customisation	Project-specific configurations upon request

Dimensions

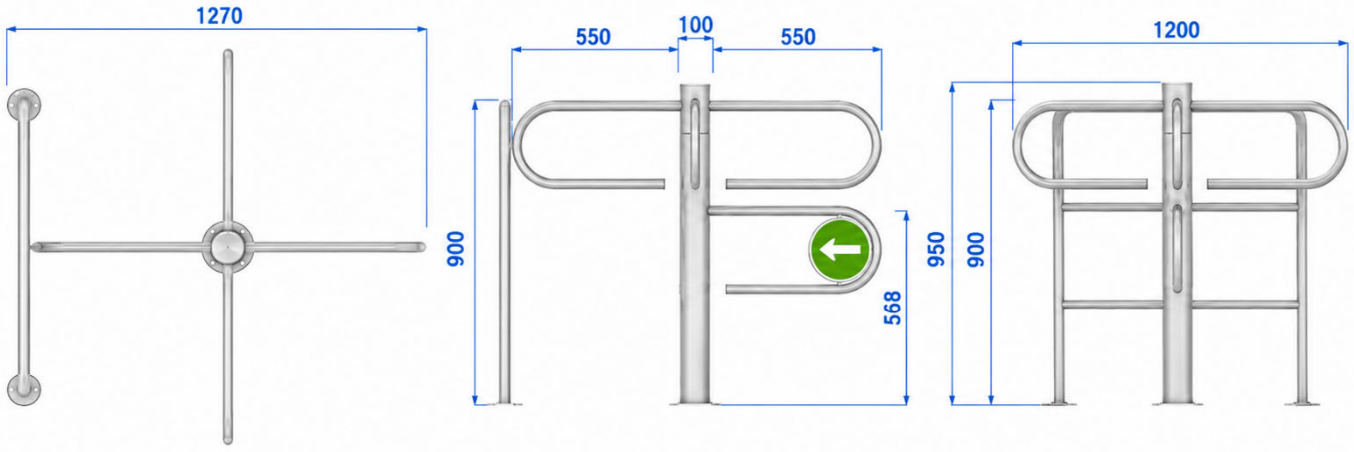

Overall Width	Body Width	Arm Length	Overall Height	Body Depth
1270 mm	100 mm	550 mm	950 mm	1200 mm

©MK GateTech. All rights reserved.