MK GateTech

MK 860
Mechanical Pedestrian Swing Gate



Main Features



Key Advantages

- Mechanical spring-centering operation
- Unidirectional or bidirectional configuration
- Available without a lock, with a mechanical lock or with an electric lock
- 90° swing movement
- Durable AISI 304 stainless steel construction
- Accessible passage for wheelchairs, goods and trolleys
- Compact Ø100 mm cylindrical post design

Standard Features

Operating Temperature	-20°C to +50°C
Protection Class	IP54
Housing	Ø100 mm cylindrical post, AISI 304 stainless steel
Acrylic Panel	5 mm transparent acrylic, 300 × 425 mm
Operation	Manual operation with a spring-centering mechanism as standard
Swing Movement	90° swing movement with spring centering
Panel Signage	Choice of two decals: Stop, Pass or Accessible
Mounting	Surface flange mounting
Environment	Indoor / Sheltered Outdoor
Warranty	2 Years

Versions

Version	Passage Direction	Locking Type
VS1	Unidirectional	No lock
VS2	Bidirectional	No lock
VS3	Unidirectional	Mechanical lock
VS4	Bidirectional	Mechanical lock
VS5	Unidirectional	Electric lock
VS6	Bidirectional	Electric lock

Optional Features

Remote Control*	External remote control
Laser Engraving	Custom logo or text engraved on the acrylic panel
PC Communication*	RS-232 / RS-422 / RS-485 communication
Under-wing Passage Detection*	Unauthorised under-wing passage detection
Automatic Opening*	Sensor-triggered automatic wing opening
Custom Colours	Powder-coated finish in selected colours
Custom Engineering	Project-specific custom solutions

* VS5 and VS6 only.

Dimensions

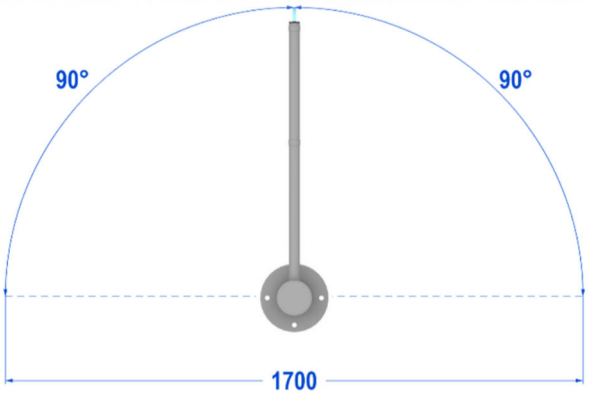

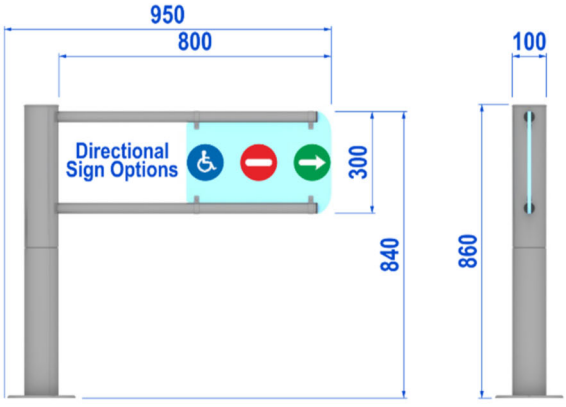

Overall Width	950 mm
Body Width	100 mm
Wing Length	800 mm
Overall Height	860 mm
Body Depth	100 mm
Unidirectional Swing Envelope	900 mm
Bidirectional Swing Envelope	1700 mm

©MK GateTech. All rights reserved.